USN [ ][ ][ ][ ][ ][ ][ ][ ][ ][ ] **[23CSBSBE11]**

FIRST SEMESTER B.Tech EXAMINATION, JANUARY -2024
PRINCIPLES OF ELECTRICAL ENGINEERING

Time: 3 Hours **Maximum Marks: 100**

Instructions: i. Missing data may be suitably assumed.

ANSWER ALL QUESTIONS

		PART-A			**05 X 02=10**
1.	**a.**	If five capacitors, each of capacitance 1μF are joined in series, what will be the capacitance of the combination?	L3	CO1	**02**
	b.	Explain the dependent and independent sources in brief	L2	CO1	**02**
	c.	Define Electrostatic field and electric field strength.	L2	CO4	**02**
	d.	Define angular frequency of the alternating current signal with appropriate formulae.	L2	CO2	**02**
	e.	Define sensors and transducers.	L2	CO6	**02**
		PART-B			**06 X 05=30**
2.	**a.**	A coil of 12 ohms resistance is in parallel with a coil of 20ohms resistance. This combination is connected in series with a third coil of 8ohms resistance. The whole circuit is connected across a battery having an e.m.f of 30V and internal resistance of 2ohms. Calculate the **i.** Power in the 12 ohms coil **ii.** Current supplied by the battery 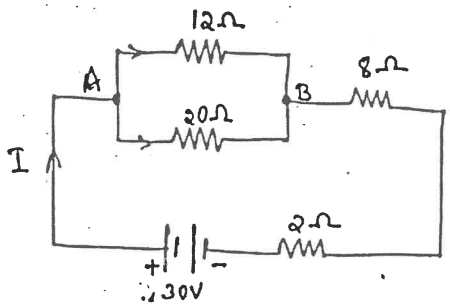 	L3	CO1	**05**
		OR			
	b.	A 230V, 50Hz supply is applied to a coil of 0.06H inductance and 2.5Ω resistance connected in series with a 6.8μF capacitor. Calculate: **i.** Impedance **ii.** current **iii.** phase angle between current and voltage **iv.** power factor **v.** power consumed.	L2	CO1	**05**

3.	a.	Derive an expression for currents flowing through parallel circuit of 3 resistors are connected in parallel way.	L2	CO1	05
		OR			
	b.	Write a short note on Electrical Wiring and Illumination system.	L2	CO5	05
4.	a.	Derive an expression for power in AC circuit with a pure capacitance.	L2	CO2	05
		OR			
	b.	Explain in brief the importance and types of earthing.	L2	CO5	05
5.	a.	A pure inductive coil allows a current of 10A to flow from a 230V, 50HZ supply. Find i) inductance of the coil ii) power absorbed and iii) equations for voltage and current.	L2	CO2	05
		OR			
	b.	Write short notes on magnetic field and Faraday's laws.	L2	CO4	05
6.	a.	State and explain kirchoff laws.	L2	CO1	05
		OR			
	b.	Write short notes on current and voltage transformation.	L2	CO1	05
7.	a.	Write a short note on concept of "phase" of the alternating current sinusoidal signal in an AC circuit.	L2	CO1	05
		OR			
	b.	Differentiate pure inductance and resistance in an AC circuit.	L2	CO1	05
		PART-C		**06 X 10=60**	
8.	a.	What are the performance characteristics of sensors and explain any 5 in detail.	L2	CO6	10
		OR			
	b.	Derive an expression for power in AC R-L-C Series circuit.	L2	CO2	10
9.	a.	In the given circuit below, find the value of D.C curernt through R_L by using kirchoff's laws. 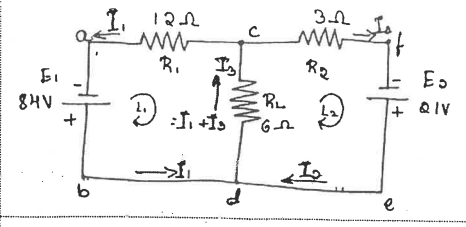	L3	CO1	10
		OR			
	b.	Derive an expression for the 3 inductance of inductors connected in parallell circuit.	L3	CO1	10
10.	a.	Explain the principle of operation for Single phase transformer in detail.	L3	CO4	10

		OR			
	b.	Using the Thevenin's theorem, find the current *i* through $R = 2\Omega$ for the circuit shown in below Fig. 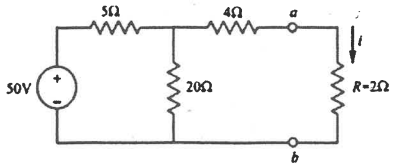	L3	CO2	**10**
11.	**a.**	Analyse a RL circuit supplied by E volts at a frequency of f Hz for the current and power. Draw the phasor diagram	L2	CO1	**10**
		OR			
	b.	By means of superposition theorem, calculate the currents in the network shown. 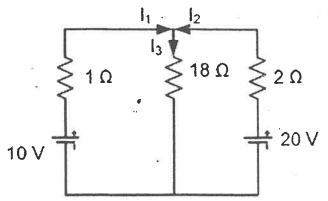	L2	CO1	**10**
12.	**a.**	For the circuit below, find the value of D.C curernts I_1 and I_2 by using kirchoff's laws 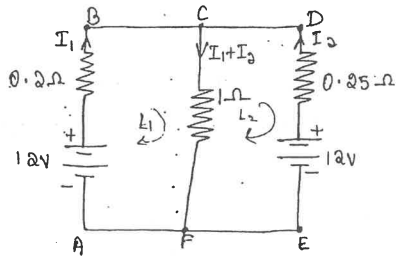	L3	CO1	**10**
		OR			
	b.	Derive an expression for power in AC R-C Series circuit	L2	CO1	**10**
13.	**a.**	Write a short note on star to delta conversion and vice versa.	L2	Co1	**10**
		OR			
	b.	Calculate the equivalent inductance of the following inductive circuit. 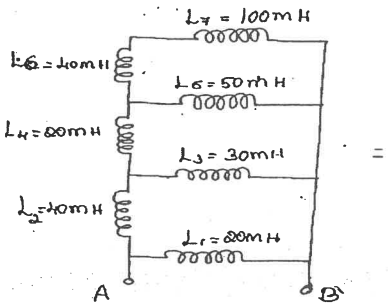	L3	CO1	**10**